CHAMPION®

РУКОВОДСТВО ПО ЭКСПЛУАТАЦИИ ГАЗОНОКОСИЛКА С БЕНЗИНОВЫМ ДВИГАТЕЛЕМ

LMZ5130/1
LMZ5130/2

RU РУССКИЙ

EAC

K H > ? J @ : G B ?

L ? O G B Q ? K D B ? O : J : D L ? J B K L B D B 3
< < ? > ? G B ? 4
A G : D B ; ? A H I : K G H K L B M I J : < E ? G B Y B ... B G N H J F : P B B 5
H K G H < G U ? I H G Y L B Y B H I J ? > ? E ? G B Y 6
B K I H E V A H < : G B ? I H G : A G : Q ? G B X 7
H ; S B ? I J : < B E : L ? O G B D B ; ? A H I : K G H K L B 8
L J ? ; H < : G B Y L ? O G B D B ; ? A H I : K G H K L B < H < J ? F Y ... W D K I E M : L : P B 10 L : P B
H K G H < G U ? M A E U B H J = : G U M I J : < E ? G B Y 12
K ; H J D : 14
I H > = H L H < D : D J : ; H L ? B W D K I E M : L : P B Y 18
I H > = H L H < D : D J : ; H L ? 18
F H L H J G H ? F : K E H 18
A : I J : < D : G H < H = H > < B = : L ? E Y ... F : K E H F 19
I J H < ? J D : < H A > M R G H = H N B E V L J : 20
L H I E B < H 20
< U ; H J J ? @ B F : J : ; H L U 21
A : I M K D > < B = : L ? E Y 21
H K L : G H < D : > < B = : L ? E Y 23
H ; D : L D : > < B = : L ? E Y 23
I J : < B E : J : ; H L U 24
L ? O G B Q ? K D H ? H ; K E M @ B < : G B ? 28
< B > U J : ; H L B I ? J B H > B Q G H K L V L ? O G B Q ? K D H = H ... H ; K E M @ B 28 B < : G B
H ; K E M @ B < : G B ? K B K L ? F U H O E : @ > ? G B Y 28
A : F ? G : F H L H J G H = H F : K E : 30
H ; K E M @ B < : G B ? < H A > M R G H = H N B E V L J : 31
H ; K E M @ B < : G B ? L H I E B < G H = H N B E V L J : B L H I E B < G H = H ... 32 D :
H ; K E M @ B < : G B ? D : J ; X J : L H J : 33
J ? = M E B J H < D : A : A H J H < D E : I : G H < 33
H ; K E M @ B < : G B ? K < ? Q B A : @ B = : G B Y 33
H ; K E M @ B < : G B ? L J : < H K ; H J G B D : 34
H ; K E M @ B < : G B ? D H J I M K : = : A H G H D H K B E D B 34
H ; K E M @ B < : G B ? G H @ : 34
H ; K E M @ B < : G B ? J ? F G Y I J B < H > : O H > : 36
O J : G ? G B ? L J : G K I H J L B J H < : G B ? J ? : E B A : P B Y ... B M L B E B 38 : P B Y
I H B K D B M K L J : G ? G B ? G ? B K I J : < G H K L ? C 40
G ? B K I J : < G H K L B > < B = : L ? E Y 40
G ? B K I J : < G H K L B = : A H G H D H K B E D B 41
= : J : G L B C G U ? H ; Y A : L ? E V K L < : 42

L?OGBQ?KDB? O:J:DL?JBKLE

	OZjZdl_jbklbdb	Fh^_ev	
		LMZ5130/1	LMZ5130/2
=:AHGHDHKBED:	Lbi i_j_f_s_gby	KZfhoh^gZy	
	RbjbgZ kdZrb\Zgby ff	508	
	<ukhlZ kdZrb\Zgby ff	25-75	
	J_]mebjh\dZ \ukhlu kdZrb\Zgby	juqZ] gZ \k_ dhe_kZ	iheh`
	<u[jhk kdhr_gghc ljZ\u	Fmevqbjh\Zgb_ [hdh\hc \u[jh aZ^gbc \u[jhk \ ljZ\hk[hjgbd	
	H[t_f ljZ\hk[hjgbdZ e	65	
	Jmdhyldb kdeZ^gu_	?klv	
	FZl_jbZe ^_db	KlZev	
	>bZf_lj i_j_^gbo aZ^gbo dhe_k ^xcf kf		
	JZa[ehdbjh\dZ i_j_^gbo dhezk	?klv	
	Dhebq_kl\h i_j_^gbo dhezk	1	2
	Mjh_gv \b[jZpbb gZ jZ[hq_c ³jmdhyld_. f k		.
	=ZjZglbjh\Zgguc mjh_gv a\mdh\hc fhsghklb ^;:	98	98
	Mjh_gv a\mdh\hc ^Z\e_gby ^:		
	JZaf_ju miZdh\db kf	780 x 570 x 500	925 x 570 x 500
	<_k [_a ljZ\hk[hjgbdZ d]	37	
>< B=:L?EV	Fh^_ev	* 9.	
	Lbi	H^ghpbebg^jh\uc lZdlguc k \ha^mrguf hoeZ`^_gb_f k \_j jZkiheh`_gb_f deZiZgh\ 2+9	
	JZ[hqbc h[t_f ^\b]Zl³_ey kf	173	
	Fhsghklv e k d<l ijb h[fbg		
	>bZf_lj pbebg^jZ oh^ ihjrgy ff		
	JZ[hqb_ h[hjhlu ^\b]Zl_ey [_a gZ]jmadb h[fbg	2900±100	
	Lbi lhieb\Z	;_gabg :B g_wlbebjh\Zggu	
	H[t_f lhieb\gh]h [ZdZ e	1	
	FZdkbfZevguc m^_evguc jZkoh^ lhieb\Z] d<l q	„	
	Lbi fZkeZ \ dZjl_j_ ^\b]Zl_ey	&+$03,21 6$(	
	H[t_f fZkeZ \ dZjl_j_ e		
	Lbi kbkl_fu kfZadb	F_lh^hf jZa[jua]b\Zgby	
	Kbkl_fZ aZimkdZ	Jmqghc klZjl_j	
	Kbkl_fZ aZ`b]Zgby	7&,	
	Lbi k_qb aZ`b]Zgby	F7RTC	
	<ha^mrguc nbevlj	;mfZ]Z ihjhehg	

L_ogbq_kdb_ oZjZdl_jbklbdb fh]ml [ulv baf_g_gu [_a ij_^\Zjbl_evgh]h

<<?>?GB?

M\Z`Z_fuc ihevah\Zl_ev

;eZ]h^Zjbf aZ ihdmidm ijh^mdpbb &+$03,21 < ^Zg
ijb_^_gu ijZ\beZ wdkiemZlZpbb]Zahghdhkbedb &+$03,
jZ[hl \gbfZl_evgh ijhqlbl_ jmdh\h^kl\h WdkiemZlbjmcl_
_lkl\bb k ijZ\beZfb b k mq_lhf lj_[h\Zgbc [_ahiZkghklb
kl\mykv a^jZ\uf kfukehf KhojZgbl_ jmdh\h^kl\h ijb g_
\k_]^Z fh`_l_ h[jZlblvky d g_fm

Ijh^mdpby &+$03,21 hlebqZ_lky \ukhdhc fhsghklvx b
ghklvx ijh^mfZgguf ^baZcghf b wj]hghfbqghc dhgkljmdp
s_c m^h[kl\h _z bkihevah\Zgby Ebg_cdZ l_ogbdb &+$0
rbjy_lky gh\ufb mkljhckl\Zfb dhlhju_ ihklhyggh kh_jr_

Ijhba\h^bl_ev hklZ\ey_l aZ kh[hc ijZ\h [_a ij_^\Zjbl_
e_gby \ghkblv baf_g_gby \ dhfie_dlghklv dhgkljmdpbx
^_lZe_c g_ mom^rZxsb_ dZq_kl\h mkljhckl\Z < k\yab k
f_g_gby \ l_ogbq_kdbo oZjZdl_jbklbdZo b kh^_j`Zgb_ j
iheghklvx khhl_lkl\h\Zlv ijbh[j_l_gghfm mkljhckl\m Bf
bamqZy jmdh\h^kl\h ih wdkiemZlZpbb

<g_rgbc \b^ ijh^mdpbb fh`_l hlebqZlvky hl bah[jZ`_gby gZ lblmevghf e
ih wdkiemZlZpbb

K ihke_^g_c _jkb_c jmdh\h^kl\Z ih wdkiemZlZpbb fh`gh hagZd

www.championtool.ru

AG:DB ;?AHI:KGHKLB MIJ:<E?GBY B BGNHJF:PBB

AgZdb [_ahiZkghklb mijZ\e_gby b bgnhjfZpbb jZaf_s_gu gZ] gZde__d eb[h gZg_k_gu j_ev_ngh gZ dhjimk_

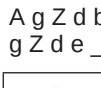	AZij_s_gh jZ[hlZlv gZ kdeh k m]ehf gZdehgZ [he__		<h \j_fy jZ[hlu ^_j`bl_ ih^Zevr_ jmdb hl hl_jklby [hdh\h]h \u[jh
	lj_^mij_`^_gb_ HiZkghklv <jZsZxsbcky gh`		G_ ih^klZ\eycl_ \h \j_fy jZ[hlu jmdb beb gh]b ih^ gh` HiZkghl ihemq_gby ly`_ehc ljZ\fu
	lj_^mij_`^_gb_ Hklhjh`gh <gbfZgb_		Hklhjh`gh <hafh`_g hlkdhd ihklhjhggbo ij_^f_lh\
	lhklhjhggb_ ex^b ^_lb b `b\hlgu_ ^he`gu gZoh^blvky gZ [_ahiZkghf jZkklhygbb \g_ jZ[hq_c ahgu AZij_sZ_lky gZoh^blvky [eb`_ f hl jZ[hlZxs_]h mkljhckl\Z		AZ]emrbl_ ^\b]Zl_ev b m[_jbl_ ihklhjhggb_ ij_^f_lu
	Hklhjh`gh =hjyqb_ ih_joghklb		lh`ZjhhiZkgh E_]dh\hkieZf_gyxsb_ky _s_kl\
	lj_^mij_`^_gb_ <k_]^Z bkihevamcl_ ijZ\be bgkljmf_glu b hjb]bgZevgu aZiZkgu_ qZklb		G_ ^himkdZcl_ d jZ[hl_ ihklhjh ebp hkh[_ggh ^_l_c
	ljhqlbl_ jmdh\h^kl\h ih wdkiemZlZpbb i_j_^ gZqZehf jZ[hlu		Kgbfbl_ dheiZqhd \ukhdh\hevlg ijh\h^Z kh k_qb aZ`b]Zgby ijb ijh\_^_gbb j_fhglZ beb l_ogbq_kdh]h h[kem`b\Zgby
	ljb jZ[hl_ gZ^_\Zcl_ aZsblgu_ hqdb gZmrgbdb gZ^_\Zcl_ aZsblgmx dZkdm _keb _klv hiZkghklv iZ^_gby ij_^f_lh\ b mrb[Z]heh\u		JuqZ]]ZaZ lheh`_gb_ ©q_j_iZoZª ² ohehklu_ h[hjhlu ^\b]Zl_ey lheh`_gb_ ©aZypª ² fZdkbfZevgu_ h[hjhlu ^\b]Zl_ey
	Ghkbl_ ijhqgmx h[m\v gZ g_ kdhevays_c ih^hr_ AZij_sZ_lky jZ[hlZlv [hkbdhf beb \ h[m\b k hldjuluf		DjZcg__ i_j_^g__ iheh`_gb_ ² \ha^mrgZy aZkehgdZ dZj[xjZlhj aZdjulZ
	JZ[hlZcl_ \ aZsblguo i_jqZldZo		>ey hklZgh\db ^\b]Zl_ey hlimkl juqZ] hklZgh\db ^\b]Zl_ey >ey \dexq_gby ijb\h^Z oh^Z gZ`fbl_ juqZ] \dexq_gby ijb\h^Z oh^Z

РАСШИФРОВКА СЕРИЙНОГО НОМЕРА

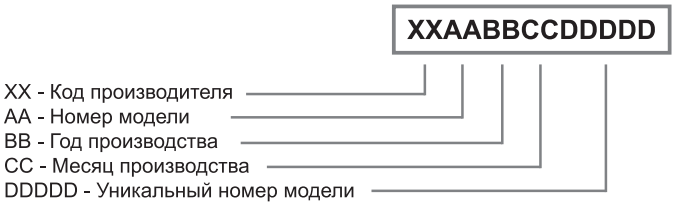

F_kyp b]h^
ba]hlh\e_gby
mdZaZg gZ miZdh\
b beb mkljhckl_
\ khklZ_
k_jbcgh]h ghf_jZ

HKGH<GU? IHGYLBY B HIJ?>?E

>_dZ]Zahghdhkbedb \gmljb dhlhjhc

Fhsghklv fZdkbfZevgZyb[hevrZy fhsghklv jZa\b\Z_fZy ^\b
mkljhckl\Z ijb ghfbgZevguo mkeh\byo wdkiemZlZpbb b bkihev
l_q_gb_ h]jZgbq_ggh]h \j_f_gb

Mjh_gv \b[jZpbmjh_gv f_oZgbq_kdbo dhe_[Zgbc hdZau\Zx
\ebygb_ gZ q_eh_dZ lhqgh_ hij_^_e_gb_ kf =HKL BKH

Mjh_gv a\mdh\h]h ^Zae_bkyl hl jZkklhygby f_`^m kemrZ-l_e_f
dhf rmfZ lhqgh_ hij_^_e_gb_ kf =HKL

Mjh_gv a\mdh\hc fhsgZkZl_jbam_l mjh_gv rmfZ \ _]h bklhqg
ky ihklhygghc ^ey ^Zggh]h h[hjm^h\Zgby _ebqbghc lhqgh_ l

< jmdh\h^kl_ bkihevam_lky f_`^mgZjh^gZy kbkl_fZ _^bgbp KB A
\ kdh[dZo beb q_j_a © ª y\eyxlky kijZ\hqgufb b \ g_dhlhjuo kem-qZyo
gh_ jZkoh`^_gb_ \ k\yab k i_j_\h^hf _^bgbp ba h^ghc kbkl_fu \ ^jm]m

BKIHEVAH<:GB? IH G:AG:Q?G

=Zahghdhkbedz ^Ze__ ih-l_dklm]Zgbg dhkbedz beb mkljhckl\h ij_^gZ_ZqZiZ ^ey ex[bl_evkdh]h ebqgh]h k_f_cgh]h ^hfZrg_]h beb bgh]h bkihevah\Zgbgbx g_ k\yaZggh]h k ij_^ijbgbfZl_evkdh]h ijhn_kkbhgZevghc ^_yl_evghklvx

ПРИМЕЧАНИЕ!

G_ijhn_kkbhgZevgh_ l_evkdh_ bkihevah\Zgb jZamf_\Z_l ih^ kh[hc-wdkiemZ lZpbx mkljhckl\Z g_ [he__]h^ J_dhf_g^m_fh_ \j_fy g_ij_ju\ghc jZ[hlu hij_^_ey_lky _fdhkl-vx lh ieb\gh]h [ZdZ

Mkljhckl\h fh`_l bkihevah\Zlvky ^ey moh^Z aZ ]ZahgZfb gZ ^Zqghf beh ^_[ghf mqZkld_ ^ey kdZrb\Zgbx gZ em`ZcdZo k jh\ghc ih_jo kh[ex^_gb_f \k_o lj_[h\Zgb-c kl\Z ih wdkiemZlZpbb

Mkljhckl\h kdhgkljmb jh\Zgh lZdbf h[jZahf qlh hgh [_ahiZkgh b ^_`gh _keb wdkiemZlbjm_-lky \ \_lkl\bb k Jmdh\h^kl\hf lj_`^_ ijbklmiblv d wdkiemZlZpbb mkljhc kl\Z ijhqlbl_ b mk\hcl_ Jmdh\h^kl\h ih wdkiemZlZpbb ?keb <u-wlhljhqg gkb^_kjhdZ kem`[u- eZ_l_ j_amevlZlhf fh`_l y\blyZey_lky ljZ\fZ beb ih\j_`^_gb_ mkljhckl\Z

ВНИМАНИЕ!

Bkihevah\Zgb_ mkljhckl\Z \ ex[uo ^jm]bo p_eyo- g_ ij_^ mkfhlj_gguo gZklhysbf jmdh\h^kl\hf y\ey_lky gZjmr_gb_f mkeh\bc [_ahiZkghc wdkiemZlZpbb b ij_ djZsZ_l ^_ckl\b_]ZjZglbcguo h[yaZ l_evkl\ ihklZ\sbdZ ljhba\h^bl_ev b ihklZ\sbd g_ g_kml hl_lkl_gghklb aZ ih\j_`^_gby \hagbdrb_ \ke_^kl\b_ bkihevah\Zgby mkljhckl\Z g_ ih gZagZ q_gbx <uoh^ ba kljhy mkljhckl\Z ijb bkihevah\Zgbb g_ ih gZagZq_gbx g_ y\ ey_lky]ZjZglbcguf kemqZ_f

ВНИМАНИЕ!

AZij_sZ_lky \ghkblv dZdl e[h baf_g_gby \ dhgkl ebqbghc ihemq_gby k_jv ijZ\fu Z lZd`_ ijbqbghc \uoh^Z kljhy mkljhckl\Z ljhba\h^bl_ev ihklZ\sbd g_ g_kml hl_lkl_gg kkbaZ ex[u_ ms_j[b m[uldb \i rb ba aZ wdkiemZlZpbb mkljhc kZfhklhyl_evgh ijhba_^zggufb kzjmdlb\gufb baf_g_gbyfb

ВНИМАНИЕ!

Bkihevamcl_ ^ey j_fhglZ h[kem`b\Zgby jZkoh^gu_ aZ\hjhlba]hlh\bl_e_f b hjb]bg gbl_ aZ\Zkgu_ qZklb Bkihevah\ jhdhvxg^h\Zgguo jZkoh^guo fZl _l <Zk ijZ\Z gZ]ZjZglbcgh-_ h[k \Zgb_ mkljhckl\Z

ВНИМАНИЕ!

AZij_sZ_lky bkihevah\Z]Zahghdhkbedm ^ey kj_aZ q_d ijb moh^_ aZ]Zahghf aZ\hjhlba]hlh\bl_e_f b hjb]bg gbl_ aZ\Zkgu_ qZklb Bkihevah\ jhdhvxg^h\Zgguo jZkoh^guo fZl _l <Zk ijZ\Z gZ]ZjZglbcgh-_ h[k \Zgb_ mkljhckl\Z

ВНИМАНИЕ!

Bkihevah\Zgb_ mkljhckl\Z \ ex[uo ^jm]bo p_eyo- g_ ij_^ mkfhlj_gguo gZklhysbf jmdh\h^kl\hf y\ey_lky gZjmr_gb_f mkeh\bc [_ahiZkghc wdkiemZlZpbb b ij_ djZsZ_l ^_ckl\b_]ZjZglbcguo h[yaZ l_evkl\ ihklZ\sbdZ ljhba\h^bl_ev b ihklZ\sbd g_ g_kml hl_lkl_gghklb aZ ih\j_`^_gby \hagbdrb_ \ke_^kl\b_ bkihevah\Zgby mkljhckl\Z g_ ih gZagZ q_gbx g_ y\ ey_lky]ZjZglbcguf kemqZ_f

H;SB? IJ:<BE: L?OGBDB ;?AHI:KGHKLB

<gbfZl_evgh ijhqlbl_ ^Zggh_ Zmdh\h^ kl\h HagZdhfvl_kv k mkljhckl\h g_ y_ ihke_ mihlj_[e_gby- kbev `^_ q_f ijbklmiZlv d wdkiemZlZpbb HagZdhfvl_kv k jZ[hlhc hj]Zgh\ mhj_\ e_gby AgZcl_ qlh ^_eZlv \ wdkl_ggud kblmZpbyo H[jZlbl_ hkh[h_ \gbfZgb gZ bgnhjfZpbx dhlhjhc ij_^r_kl\mxl ke_^mxsb_ aZ]heh\db

ПРЕДУПРЕЖДЕНИЕ!

G_\uiheg_gb_ lj_[h\Zgby jmdh\h^kl\Z ijb_^_l d kf_j l_evghfm bkoh^m beb ihemq gbx k_jv_aguo ljZ\f

ОСТОРОЖНО!

G_\uiheg_gb_ lj_[h\Zgby jm dh\h^kl\Z ijb_^_l d ihemq gbx ljZ\f kj_^g_c ly`_klb

ВНИМАНИЕ!

G_\uiheg_gb_ lj_[h\Zgby jm dh\h^kl\Z ijb_^_l d ih\j_` ^_gbx mkljhckl\Z

ПРИМЕЧАНИЕ!

MdZau\Z_l gZ bgnhjfZpbx dhlhjZy [m^_l ihe_agZ ijb wdkiemZlZpbb mkljhckl\Z

lj_`^_ q_f gZqZlv jZ[hlm \ i_j\uc jZa ihemqbl_ bgkljmdlZ` ijh^Z\pZ beb ki_pbZebklZ dZd ke_^m_l ij \bevgh h[jZsZlvky k mkljhckl\h ijb g_h[oh^bfhklb ijhc^bl_ dmjkgZy mq_gby

G_kh_jr_gghe_lgb_ ebpZ d jZ[hl_ k mkljhckl\hf g_ ^himkdZxlky jaZ bk dexq_gb_f ebp klZjr_ e_l ijhZ ^ysbo h[mq_gb_ ih^ gZ^ahjhf

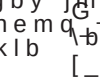

WdkiemZlbjmcl_ mkljhckl\h \ jhj r_f nbabq_kdhf b ikbobq_kdhf kh klhygbb

ПРЕДУПРЕЖДЕНИЕ!

G_ jZ[hlZcl_ k mkljhckl\hf \ [he_ag_gghf beb mlhfe_g ghf khklhygbb \ khklhygbb

mdh\h^ evgh]h beb gZjdhlbq_kdh g_ gby_ ihke_ mihlj_[e_gby- kbev kl\mxsbo e_dZjkl\ beb bguo _s kihkh[guo hdZaZlv \ebygb_ gZ kdh_ b ikbobq_kdh_ khklhygb_

JZ[hlZcl_ lhevdh \ ^g_\gh_ beb ijb ohjhr_f bkdmkkl_ggh _s_gbb

Mkljhckl\h jZaj_rZ_lky i_j_^Z beb ^Z\Zlv \h \j_f_ggh_- ihev gb_ gZijhdZl lhevdh l_f ebp ihju_ ohjhrh agZdhfu k ^Zggh ^_evx b h[mq_gu h[jZsZlvky ljb wlhf h[yaZl_evgh ^he`gh i]Zlvky jmdh\h^kl\h ih wdkiemZ

G_ gZqbgZcl_ jZ[hlZlv g_ il \b\ jZ[hqmx ahgm b g_ hij_ [_kij_iylkl_gguc imlv gZ ke w\ZdmZpbb

G_ j_dhf_g^m_lky jZ[hlZlv m kl\hf \ h^bghqdm lhaZ[hlvl lhf qlh[u \h \j_fy jZ[hlu gZ klhygbb keurbfhklb dlh l h gZ ky gZ kemqZc _keb <Zf ihgZ ihfhsv

ПРЕДУПРЕЖДЕНИЕ!

Ljb g_[eZ]hijbylghc ih]h^ ^h`^v kg_] e_^ \_l_j ] j_dhf_g^m_lky hleh`blv ijhl_^_gb_ jZ[hl ± kms_kl\m_l i kgZy hiZkghklv g_kqZklgh]h k

lhklhjhggb_ ex^b ^_lb b `b\h ^hl_gu gZoh^blvky gZ [_ahi jZkkhygbb \g_ jZ[hq_c ahgu hZ_lky gZoh^blvky [eb`_- f [hlZxs_]h mkljhckl\Z

Ijh\jycl_ mkljhckl\h i_j_^ jZ fhk qlh[u m[_^blvky qlh \k_ db dj_ie_gby b ij_^hojZgbl_ ijbkihkh[e_gby gZoh^ylky gZ b \ bkijZ\ghf khklhygbb

OjZgbl_ mkljhckl\h \ aZdjulh kh g_^hklmighf ^ey ^_l_c

JZ[hlZcl_ \ iehlgh h[e_]Z\ h^_`^_ G_ ghkbl_ rbjhdmx h^_`^_ mdjZr_gby lZd dZd hgb fh]mJ i\ \ ^\b`msb_ky qZklb mkljhckl\Z

GZ^_gvl_ ijhqgu_ aZsblgu_ qZldb l_jqZldb kgb`Zxl i_jqZldb \b[jZpbb gZ <Zrb jmdb -ljh\ l_evgh_ \ha^_ckl\b_ \b[jZpbb \ua\Zlv hg_f_gb_ iZevp_\ bH[he_agb

Ghkbl_ ijhqgmx h[m\v gZ g_ kdheva ys_c ih^hr_ ^ey [hevr_c mkl\c qb\hklb G_ jZ[hlZcl_ k mkljhckl\hf [hkbdhf beb \ hldjulhc h[m\b

<k_]^Z bkihevamcl_ aZsblgu_ hqdb ijb jZ[hl_

<h ba[_`Zgb_ ih\j_`^_gby hj]Zgh\ kemoZ j_dhf_g^m_lky \h-\j_fy]Z[h lu k mkljhckl\hf bkihevah\Zlv aZ sblgu_ gZmrgbdb

G_ \ghkbl_ baf_g_gby \ dhgkljmdpbx mkljhckl\Z ljhba\h^bl_ev b ihklZ sbd kgbfZxl k k_[y hl_lkl_ aZ \hagbdrb_ \ j_amevlZl_ ke_^kl\by ljZ\fu b ih\j_`^_gby mkljhckl\Z

<k_]^Z jmdh\h^kl\mcl_kv a^jZ\uf kfukehf G_\hafh`gh ij_^mkl\h lj_lv \k_ kblmZpbb dhlhju_ \hagbdgmlv i_j_^ <Zfb ?keb dZdhc eb[h kblmZpbb ihqm\kl\h_Zeb k_[y g_m_j_ggh h[jZlbl_kv aZ kh\ lhf d ki_pbZebklm ^be_jm Z\lhjbah\Zggh]h k_j\bkgh]h hiulghfm ihevah\Zl_ex

<kSAFH@GU? HRB;HQGU? >?CKL<BY I?JKHG:E: DHLHJU? mJ i\ \ D BGPB>?GLM BEB \Z:JBB

Hrb[hqgu_ ^_ckl\by i_jkhg_ju_^ijb\h^yl d bgpb^_glm beb \ ^_e_gu \ jmdh\h^kl_ ih-wdk pbfb`_ihf_ldZfb ?>MIJ?@>?GB? HKLHJU@GH <GBF:GB?

I?J?Q?GV DJBLBQ?KDBO HLD:A

G_ bkijZ\ghklv ^\b]Zl_ey ih\j_` gh_Z b_Z^Zil_jZ gh`Z h[ju\-j_fg \h^Z oh^Z g_bkijZ\ghklv j_^m kbkl_fu ijb\h^Z oh^Z

DJBL?JBB IJ?>?EVGUO KHKLHYGBC

ПРИМЕЧАНИЕ!

Djbl_jb_f ij_^_evgh]h k klhygby mkljhckl\Z y\ey_ ky khklhygb_ ijb dhlhjhf ^Zevg_crZy wdkiemZlZpby-g_^ fZ beb wdhghfbq_kdb g_p_e_kh GZijbf_j qj_af_jguc baghk dhj wlhjh_ih ^_hhjfZpby klZj_gb_ beb jZajm maeh\ b ^_lZe_c beb bo kh\hd ijb g_\hafh`ghklb bo mkljZg_g mkeh\byo Z\lhjbabjh\Zgguo k_j p_gljh\ hjb]bgZevgufb ^_lZey beb wdhghfbq_kdZy g_p_e_khh[ijh_^_gby j_fhglZ

Djbl_jb_f ij_^_evgh]h khklh mkljhckl\Z y\ey_lky qj_af_jguc beb ih\j_`^_gb_ ^\b]Zl_ey

>?CKL<BY I?JKHG:E: IJB G:KLMIE?GBB DJBLBQ?KDBO HLD:AH< BEB >HKLB@?GBB IJ?>?EVGH=H KHKLHYGBY

Ijb gZklmie_gbb djblbq_kdbo g_h[oh^bfh ij_djZlblv wdkiemZ mkljhckl\Z b h[jZlblvky \ Z\lhjb guc k_j\bkguc p_glj ^ey ^bZ]gh j_fhglZ

LJ?;H<:GBY L?OGBDB ;?AHI:KG <H <J?FY WDKIEM:L:PBB

IH@:JG:Y ;?AHI:KGHKLV

Lhieb\h y\ey_lky e_]dh \hkieZf_gby

G_ dmjbl_ g_ ^himkdZcl_ gZebqby bkdj b ieZf_gb \ ahg_ ojZg_gby lh ieb\Z b ijb aZijZ\d_ lhieb\ghhh [ZdZ l_j_^ aZijZ\dhc b l_ogbq_kdbf h[kem`b\Zgb_f aZ]emrbl_ ^\b]Zl_ev b m[_^bl_kv \ lhf qlh hg hklu

G_ aZimkdZcl_ ^\b]Zl_ev ijb gZebqbf aZiZoZ lhieb\Z

G_ jZ[hlZcl_ k mkljhckl\hf LJ:<Fbu lhieb\h [ueh ijheblh \h \j_fy aZ ijZ\db l_j_^ aZimkdhf lsZl_evgh ijhljbl_ ih_joghklb lhieb\gh]h [ZdZ b ^\b]Zl_ey hl kemqZcgh lh]h lhieb\Z

>ey hqbkldb ^_lZe_c g_ bkiheyamcl [_gabg beb ^jm]hc \hkieZf_gyxsbc ky jZkl\hjbl_ev

G_ ijh_jycl_ gZebqb_ bkdju ijh kgylhc k_q_ aZ`b]Zgby Bkiheyamcl lhevdh l_kl_ju k\_q_c aZ`b]Zgby_kh hl_lkl\mxsb_ l_ogbq_kdbf lj_[h_gbyf

WE?DLJBQ?KD:Y ;?AHI:KGHKLV

G_ aZimkdZcl_ ^\b]Zl_ev - dh]^Z ggbybk ijZ\ghklv kbkl_fu aZ`b]Zgby \uaw\Zl ijh[hc b bkdj_gb_

OBFBQ?KD:Y ;?AHI:KGHKLV

Ba[_]Zcl_ dhglZdlZ k lhieb\hf fh`gh jZa^jZ`_gb_ dh`guo ihdjh \h\ kebabklhc h[hehqdb ]eZa ^uoZl_evguo iml_c beb-Zee_j]bq_ kdb_ j_Zdpbb ijb bg^b\b^mZ\Zhmrbl_ g_i_j_ghkbfhklb QZkluc dhglZdlbk k lhieb\hf fh`_l ijb_klb d hklju^fjm]h_ \hkiZe_gbyf b ojhgbq_kdbf wda_fZf

Gbdh]^Z g_ \^uoZcl_ \uoeh lZau <uoehigu_]Zau kh^_j`Z g_uc ]Za dhlhjuc g_ bf__l p ZiZoZ b y\ey_lky hq_gv y^ lhjZ^Zgb_ m]Zjgh]h ]ZaZ \ ^uoZgby fh`_l ijb_klb d-ihl_j agZgby beb d kf_jlb

Zl_dh]^Z g_ aZimkdZcl_ ^\b]Z ijb ihf_s_gby beb \ iehoh-ijh_ \Z_fu_of_klZo

NBABQ?KD:Y ;?AHI:KGHKLV

<k]^Z l_j^h klhcl_ gZ a_fe jycl_ jZ\gh_kby l_j_^ gZq jZ[hlu hkfhljbl_kv g_l eb gZ d_ ij_iylkl\bc h dhlhju_ <u fh kihldgmlvky b miZklv

>jhbl_ mkljhckl\h ^\mfy jmdZ Ke_^bl_ qlh[u gh]b jmd-b g_ eZ]Zebkv \[ebab jZ[hqbo hjjZ\Zxsboky qZkl_c

<k]^Z khojZgycl_ [_ahi-Zkgm jygpbx hlghkbl_evgh ^jm]bo dhlhju_ jZ[hlZxl \f_kl_ k <Zfb

Kh[ex^Zcl_ hkh[mx hklhjh`g dh]^Z <u f_gy_l_ gZijZ\e_gb_ Kh[ex^Zcl_ hkh[mx hklhjh`g ijb \uiheg_gbb jZ[hl \ kl_kg_ mkeh\byo \ h]jZgbq_ggbf ijh kl\

C <ha ^hljZ]b\Zcl_kv ^h]h-jyq_] \bl_ey b j_[_j pbebg^jZ lZd d fh_jogbo ijb_klb d k_jv_aguf h`h Z]hmrbl_ ^\b]Zl_ev i_j-^ i_ Zdgbkf mkljhckl\Z k h^gh]h f_ <k jZ[hlu ih l_ogbq_kd-hfm `b\Zgbx b j_fhglm ijh\h^bl_ aZ]emr_gghf ^\b]Zl_e_ b kgy k_qb aZ`b]Zgby dheiZqd_ \hevlgh]h ijh\h^Z

L?OGBQ?KD:Y ;?AHI:KGHKLV MKLJHCKL<H

G_ jZ[hlZcl_ k mkljhckl\hf _Zes_c [jZ pbebg^jZ b]emrbl_ev aZ]ylvg gu

I_j_^ aZimkdhf ^\b]Zl_ey ke_ bl_ aZ l_f qlh[u jZ[hqb_ hj]Zg-u mkljhc kl\Z g_ khijbdZkZebkv k-ihklhjhggb fb ij_^f_lZfb

WDHEH=BQ?KD:Y ;?AHI:KGHKL

Ihfgbl_ h g_h[oh^bfhklb hojZgu `Zes_c kj_^u b wdheh]bb lj_`^ Zejylvg_dZdb_ eb[h `b^dhklb \u ijZ\bevguc kihkh[ bo mlbe-baZp [ex^Zcl_ ijZ\beZ hojZgu hdjm`Z kj_^u ijb mlbebaZpbb fhlhjgh]h lhieb\Z nbevljh\ b ^_lZe_c mklj

ВНИМАНИЕ!

Ihevah\Zl_ev g_k_l-i_jk gZevgmx hl_lkl_gghkl aZ \hafh`guc \j_^ a^hjh\ b bfms_kl\m lj_lvbo ebp \ ke g_ijZ\bevgh]h bkihevah\Zg-by m kl\Z beb bkihevah\Zgby _]-h g_ agZq_gbx

HKGH<GU? MAEU B HJ=:GU MIJ:<E?GBY

JZkiheh`_gb_ hkgh\guo maeh\ b hj]Zgh\ mijZ\e_gby ihdZaZgh

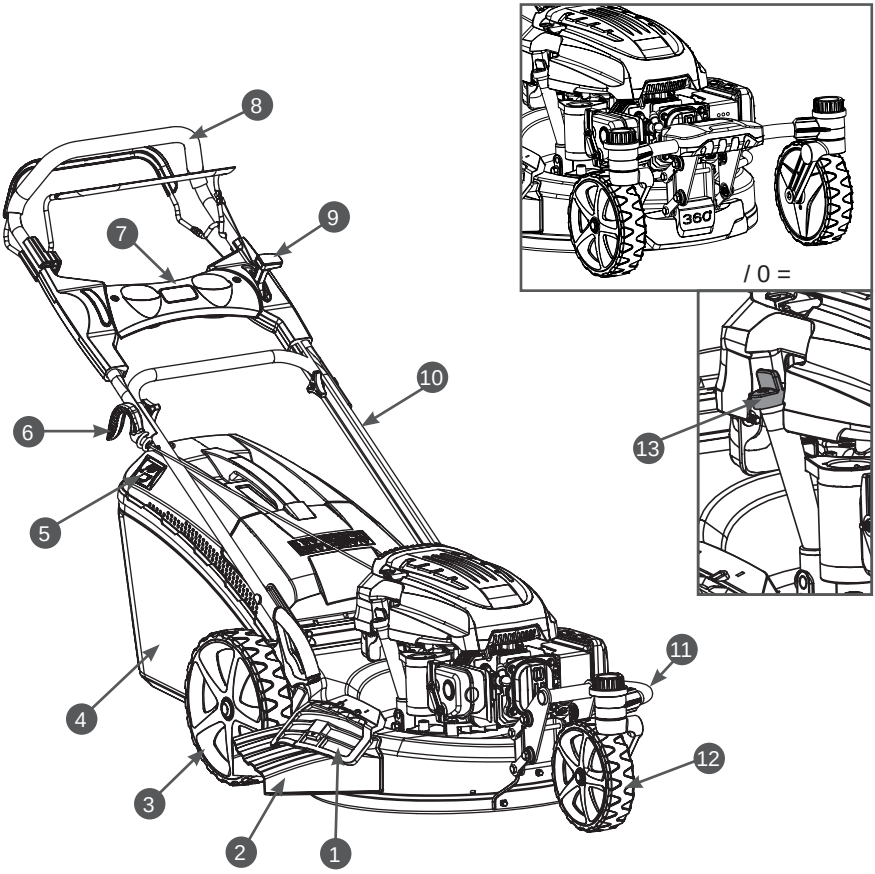

Jbk Hkgh\gu_ maeu b hj]Zgu mijZ\e_gby \b^ kijZ\Z

DjurdZ [hdh\h]h \u[jhkZ ljZ\u
GZijZ\eyxsZy [hdh\h]h \u[jhkZ ljZ\uu
Dhe_kh aZ^g__
LjZ\hk[hjgbd
Bg^bdZlhj aZiheg_gby ljZ\hk[hjgbdZ
JmqdZ klZjl_jZ
lZg_ev ^_dhjZlb\gZy k ih^klZdZggbdZfb

JmdhyldZ jZ[hqZy _jogyy qZklv
uqZ]]ZaZ
JmdhyldZ jZ[hqZy gb`gyy qZklv
Djhgrl_cg ih\hjhlgh]h dhe_kZ
Dhe_kh i_j_^g__ ih\hjhlgh_
DjurdZ smi fZkehaZeb\ghc]hjeh\

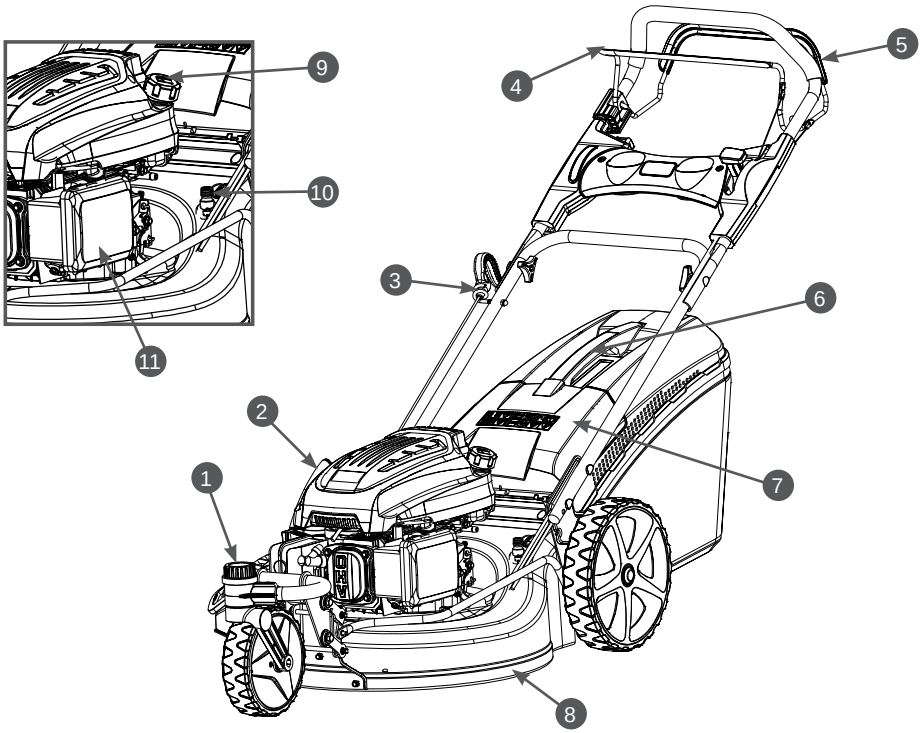

Jbk Hkgh\gu_ maeu b hj]Zgu mijZ\e_gby \b^ ke_\Z

F_oZgbaf klhihjguc ih\hjhlZ
i_j_^g_]h dhe_kZ
JuqZ] j_]mebjh\db \ukhlu kdZrdjZgby
Djhgrl_cg dj_ie_gby jmqdb klZjDhjZg
JuqZ] hklZgh\db ^\b]Zl_ey
JuqZ] \dexq_gby oh^Z
Jmdhyld Z ljZ\hk[hjgbdZ

DjurdZ ^_db aZ^gyy
>_dZ
lhieb\gh]h [ZdZ
_dlhj ^ey ih^dexq_gby
iheb\hqgh]h reZg]Z
Dhjimk \ha^mrgh]h nbevljZ

IJBGPBI J:;HLU =:AHGHDHKBEDB

ljbgpbi jZ[hlu]Zahghdhkbedb aZdexqZ_lky \ ke_^mxs_f ljb aZ
qZ] hklZgh\db ^\b]Zl_ey gZ`Zl dhe_gqZluc \Ze gZqbgZ_l \jZ
gZqbgZ_l \jZsZlvky gh` aZdj_ie_gguc gZ \Zem k ihfhsvx Z^Zi
gh`Z _]h ehiZklyfb kha^Zzlky fhsguc \ha^mrguc ihlhd \ gZijZ
qZklb ^_db d aZ^g_c LjZ\Z ih^gylZy \ha^mrguf ihlhdhf ljb aZ
xs_]hky gh`Z b aZl_f \f_kl_ k \ha^mrguf ihlhdhf \u[jZku\Z_lky
Dhg_qgZy \ukhlZ ljZ\u]Zahgz ^hklb]Z_lky aZ kq_l j_]mebjh\dl

ljb gZ`Zlbb gZ juqZ] \dexq_gby ijb\h^Z oh^Z ijhbkoh^bl aZp_
j_^mdlhj_ b djmlysbc fhf_gl hl dhe_gqZlh]h \ZeZ ^\b]Zl_ey q_
j_^mdlhj i_j_^Z_lky gZ aZ^gb_ dhe_kZ]Zahghdhkbedb

K;HJD:

DHFIE?DLGHKLV

Dhfie_dlghklv]Zahghdhkbedb ijb\ \ LZ[ebp_

L:;EBP: Dhfie_dlghklv]Zahghdhkbedb

GZbf_gh\Zgb_	Fh^_ev	
	LMZ5130/1	LMZ5130/2
=Zahghdhkbedb	rl	rl
Jmdh\h^kl\h ih wdkiemZlZpbb	rl	rl
Jmdhyldb jZ[hqZy _jogyy qZklv	rl	rl
Jmdhyldb jZ[hqZy gb`gyy qZklv	rl	rl
Dhfie_dl dj_i_`Z	rl	rl
Dexq k_qghc	rl	rl
lZg_ev ^_dhjZlb\gZy k ih^klZdZggbdZfb	rl	rl
LjZ\hk[hjgbd	rl	rl
GZijZ\eyxsZy-[hdh \h]h \u[jhkZ ljZ\u	rl	rl
Mihj aZ^g_c djurdb ^_db	rl	rl
AZ]emrdZ ^ey fmev qbjh\Zgby	rl	rl
Djhgrl_cg i_j_^g_]h dhe_kZ	rl	-
lZg_ev aZsblgZy djhgrl_cgZ	rl	-
Dhe_kh i_j_^g__	rl	-
DheiZd dhe_kZ	rl	-

MklZgh\bl_ i_j_^g__ dhe_kh dh^/0_Z >ey wlh]h \uihe ke_^mxs__

² mklZgh\bl_ djhgrl_cg i_j_^g_ e_kZ Kh\f_klbl_ hl_jklby \ rl_cg_ b ^_d_]Zahghdhk-bedb l_ \ hl_jklby kh klhjhgu \gmlj qZklb ^_db [helu k d\Z^jZlgu]heh\dhf b aZdjmlbl_]Zcdb J

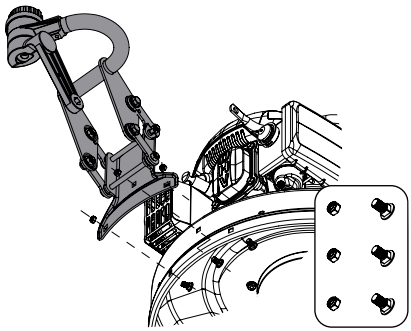

Jbk MklZgh\dZ djhgrl_cgZ i_j_^ dhe_kZ

² mklZgh\bl_ aZsblgmx iZ-g_ev rl_cgZ i_j_^g_]h dhe_kZ AZ _z gZ ^_d_ k ihfhsvx kZ-fhgZj sbo \bglh\ Jbk

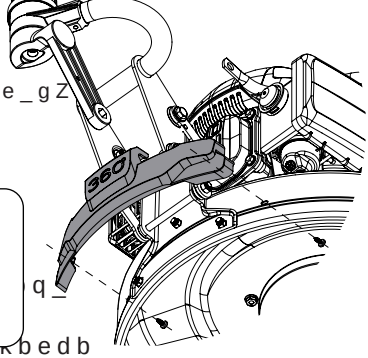

± AZ]emrdZ ^ey fmevqbjh\Zgby \klZ\e_gZ \ dhjimk ^_db

ВНИМАНИЕ!

Ijhba\h^bl_ev hklZ\ey_l aZ kh[hc ijZ\h [_a i-j_^ l_evgh]h m_^hfe_g-by kblv baf_g_gby \ dhfie_dlghkl\

=Zahghdhkbedb ihklZ\ey_lky \ q_ kdb kh[jZgghf khklhygbb

>ey hdhgqZl_evghc k[hjdb]Zahghdhkbedb

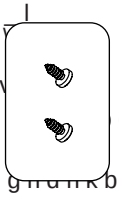

Ba\e_dbl_ ba miZdh\db kh^_jbl_ Jbk JZkiZdmcl_ \k_ ^_lZeb b iheh`bl_ bo djhgrl_cgZ gZ jh\gmx mklhcqb\mx ih_joghklv

Jbk MklZgh\dZ aZsblghc iZg_

2 mklZgh\bl_ ijm`bgm f_oZgbafZ j_ ]mebjh\db \ukhlu kdZrb\Zgby AZ p_ibl_ djxqdb ijm`bgu aZ ly]m b e_\uc djhgrl_cg dj_ie_gby jZ[h jmdhyldb Jbk

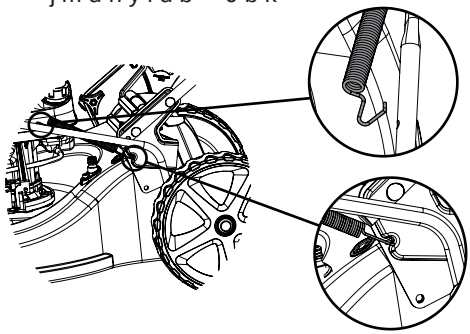

Jbk MklZgh\dZ ijm`bgu f_oZgbafZ j_]mebjh\db \ukhlu kdZrb\Zgby

2 aZdj_ibl_ ly]m f_oZgbafZ j_]mebjh\ db \ukhlu kdZrb\Zgby gZ djhgrl_cg_ i_j_^g_]h dhe_kZ MklZgh\bl_ ly]m gZ ribevdm ihke_ q_]h aZdjmlbl_ dm Jbk

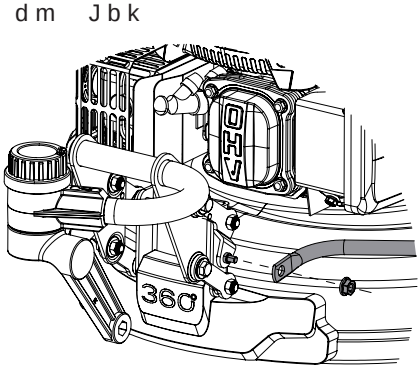

Jbk Dj_ie_gb_ ly]b f_oZgbafZ j_]mebjh\db \ukhlu kdZrb\Zgby

2 mklZgh\bl_ b aZdj_ibl_ dhe_kh gZ djhgrl_cg_ k ihfhsvx [helZ b ijm `bghc rZc[u dZd ihdZaZgh gZ Jbk Ihke_ dj_ie_gby dhe_kZ mklZgh\bl_ dheiZd dhe_kZ Jbk

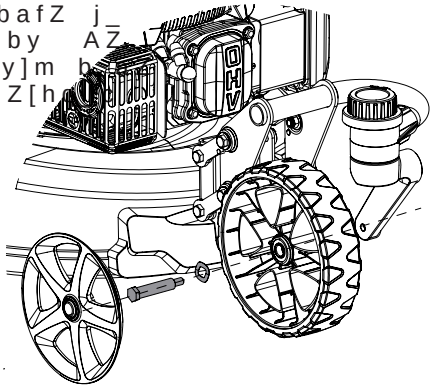

Jbk MklZgh\dZ i_j_^g_]h dhe_

MklZgh\bl_ gb`gxx qZklv jZ[ jmdhyldb Kh\f_klbl_ \_jog_ \_jklb_ \ gb`g_c qZklb jmdh djhgrl_cg_ \klZ\vl_ \ h[jZah\Z ky hl_jklb_ [hel k d\Z^jZ ih_]hdh\dhf mklZgh\bl_ rZc[m djmlbl_ r_klb]jZggmx]Zcdm ly]b\Zy _z Jbk Lhqgh lZd gh\bl_ ^jm]mx klhjhgm gb`g_ jZ[hq_c jmdhyldb

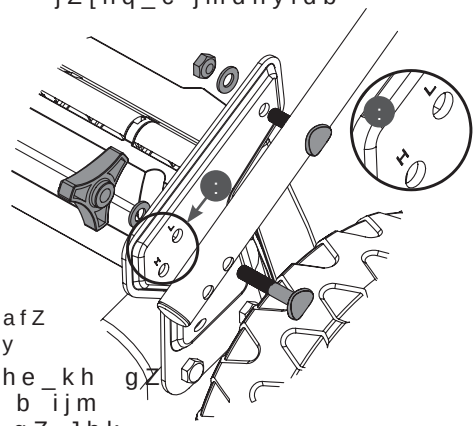

Jbk MklZgh\dZ gb`g_c qZklb jm jmdhyldZ jZ[hqZy gb`gyy qZk ;hel =ZcdZ r_klb]jZggZy =ZcdZ [ZjZrdh\Zy

JmdhyldZ bf__l ^\Z mklZgh\hqguo ih eh`_gby \ukhdh_ b gbadh_ Kh\f_klbl_ h^gh ba hl\_jklbc / beb + \ djhgrl_cg_ gb`g__ hl_jklb_ ©+ª \ djh-grl_cg_ kh hl_lkl\m_l [he__ \ukhdhfm iheh`_gbx jZ[hq_c jmdhyldb \_jog__ hl\_jklb_ ©/ª khhl\_lkl\m_l [he__ gb-adhfm iheh `_gbx jZ[hq_c jmdhyldb b-khhl_lkl\m xs__ hl_jklb_ \ gb`g_c qZklb jmdhyldb b \klZ\vl_ \ h[jZah\Z\r__ky hl\_jklb_ [hel k d\Z^jZlguf ih^]heh-\dhf mklZ gh\bl_ rZc[m b aZdjmlbl_ [ZjZrdh\mx ]Zcdm g_ aZly]b\Zy _z Jbk Lhqgh lZd`_ mklZgh\bl_ ^jm]mx klhjhgm gb`g_c qZklb jZ[hq_c jmdhyldb

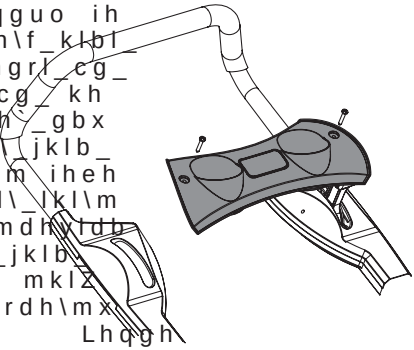

Jbk MklZgh\dZ iZg_eb k ih^klZdZggbdZfb

MklZgh\bl_ _jogxx qZklv jZ[hq_c jmdhyldb Kh\f_klbl_ hl_jklby _jog_c b gb`g_c qZklyo jZ[hq_c jmdhyldb \klZ\vl_ \ h[jZah\Z\rxs_ky hl_jklby [helu mklZgh\bl_ rZc[u b aZdjmlbl_ [ZjZrdh\u_]Zcdm Jbk

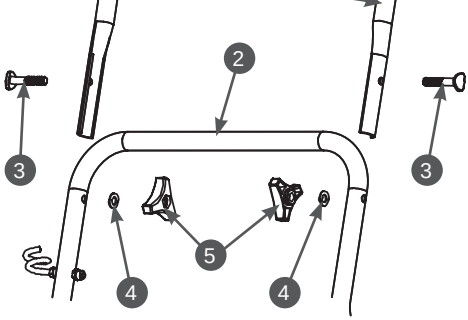

Jbk MklZgh\dZ _jog_c qZklb jmdhyldb JmdhyldZ _jogyy qZklv JmdhyldZ gb`gyy qZklv ;hel RZc[Z =ZcdZ [ZjZrdh\Zy

MklZgh\bl_ gZ jmdhyldb -iZg_ev k ih^ klZdZggbdZfb b aZdj_ibl-_ _z k ihfh svx kZfhgZj_aZxsbo \bglh\ Jbk

klZ\vl_ = h[jZagu_ gZdhg_ ljhkh\ hklZgh\db ^\b]Zl_-ey b [hqgy oh^Z \ hl_jklby \ -khhl\ xs_ky juqZ]Zo k \gmlj_gg_c kl juqZ]h\ juqZ] \dexq_gby- oh^ gb]h p_lZ juqZ] hklZgh\db ^ ey `zelh]h p_lZ Jbk - H db mdZaZgguo ljhkh\ aZdj_ie _jog_c qZklb jmdhyldb _jog ± ljhk hklZgh\db ^\b]Zl_ey g ljhk ± ljhk \dexq_gby ijb\h^Z Jbk lhke_ wlh]h \k-lZ\vl_]b \dexq_gby ijb\h^Z oh^Z q p_lZ b hklZgh\db ^\b]Zl-_ey]h p_lZ \ khhl_lkl\mxsb_ h klby gZ jZ[hq_c jmdhyld_ Jbk

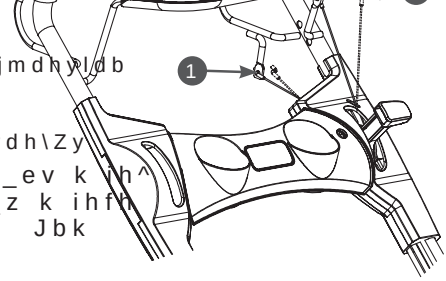

Jbk MklZgh\dZ juqZ]h\ b ljhkh JuqZ] b ljhk \dexq_gby oh^Z JuqZ] b ljhk hklZgh\db ^\b]Zl_

GZ`fbl_ gZ juqZ] hklZg-h\db A^Zdj_ibl_ gb`gxx ldZg_\mx
]Zl_ey ihlygbl_ aZ jmqdm klZjl_jZ q_j_a l\blaZp_iu gZ jZfd_ ljZ\hk[hj
ijh^_gvl_ rgmj klZjl_jZ q_j_a l\blaZp_iu gZ jZfd_ ljZ\hk[hj
db djhgrl_cgZ b aZdj_ibl_ jmqdbm
klZjl_jZ gZ djhgrl_cg_ gZ jZ[hq_c
jmdhyld_ dZd ihdZaZgh gZ Jbk

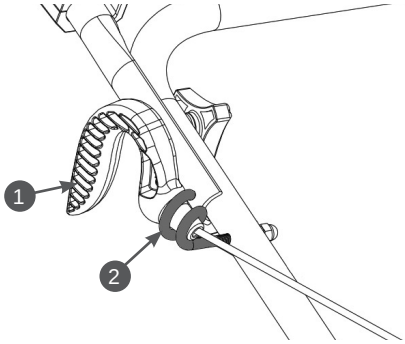

Jbk Dj_ie_gb_ jmqdb klZjl_jZ gZ jmdhyld_

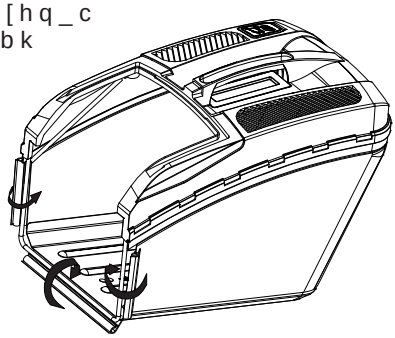

Jbk Dj_ie_gb_ gb`g_c qZklb ljZ\hk[hjgbdZ

JmqdZ klZjl_jZ Djhgrl_cg

ВНИМАНИЕ!

=Zahghdhkbedz ihklZ\ey [_a fZkeZ \ dZjl_j_ ^\b]Z ey l_j_^ aZimkdhf \ jZ[g_h[oh^bfh aZeblv \ dZjl_j ^\b]Z g_h[oh^bfh_ dhebq_kl\h q-bklh] lhjgh]h fZkeZ ^ey q_luj_olZdlg ^\b]Zl_e_c

IH>=HLH<D: D J:;HL? B WDKIEM:L:PBY

D wdkiemZlZpbb ^himkdZ_lky ijh_gv fZkeZ b ^himkdZ_lky i_j\h]h d\Zebnbdbpbhggh]h mjh_gv fZkeZ b ^himkdZ_lky lj_[mxsbc ki_pbZevghc d\Zebnbdbpbhggh]h mjh_gv fZkeZ b ^himkdZ_lky

IH>=HLH<D: D J:;HL?

l_j_^ gZqZehf jZ[hlu g_h[oh^bfhklb eZlv ke_^mxs__

< h[yaZl_evghf ihjy^d_ ijh_klb dhgljhevguc hkfhlj]Zahghdhkbedb GZebqb_ ihlzdh\ fZkeZ b lhieb\guc g_bkijZ\ghklv kbkl_f iblZgby \h^Z hljZ[hlZ\rbo]Zah\ -ih\j_jh\Zgby gb_ hkgh\guo dhjimkguo we_f_glh\ Z lZd`_ gZebqb_ ijhqbo g_bkijZ\ghklv -i_j_^ \Zgby jm`_ggZy g_bkijZ\ghklv -i_j_^ \Zgby qZehf wdkiemZlZpbb]Zahghdhkbedb ^he`gZ [ulv mkljZg_gZ ->ey mkljZ g_gby g_bkijZ\ghklb j_dhf_g^m_lky h[jZlblvky \ Z\lhjbah\Zgguc k_jbk guc p_glj &+$03,21

ВНИМАНИЕ!

AZij_sZ_lky wdkiemZlZpby]Zahghdhkbedb ijb gZebqb_ g_bkijZ\ghkl_c G_ mkljZg_gb_ ijh[e_fu i_j_^ jZ[hlhc fh`_ klZlv ijbqbghc ihemq_gby k_jvZguo ljZ\f b ihehfdb mkljhckl\Z <uoh^ba kljhy mkljhckl\Z ih wlhc ijbqbg_ y\ey_lky]ZjZglbcguf kemqZ_f

Ijh_jblv aZly`dm j_av[h\uo kh_^fZkeh g_gbc dj_i_`guo we_f_glh\

Ijh_jblv bkijZ\ghklv hj]Zgh mijZ\e_gby b ij_^hojZgbl_evguo we_f_glh\

Ijh_jblv bkijZ\ghklv gh`Z b lZ \hk[hjgbdZ

Ih^]hlh\blv jZ[hqmx ahgm ijb g_hf oh^bfhklb h]jZ^blv __ ij_^mrj_g^Zgb xsbfb lZ[ebqdZfb Hkfhlj_lv ljZ\ma m[jZlv ihklhjhggb_ ij_^f_lu\ud gb iZedb ijh\h^Z b l i

Ijb]hlh\blv fhlhjgh_ fZkeh b aZij\ \blv ^\b]Zl_ev gh\h]h mkljhckl\Z beb

ijh_jblv mjh_gv fZkeZ b ^himkdZ_lky ijb g_h[oh^bfhklb

jh_jblv khklhygb_ \ha^mrnbevljZ ljb g_h[oh^bfhklb h`blv

ljb]hlh\blv lhieb\h b aZij\Z\blv ieb\guc [Zdklb

<uljZlv j_`bf jZ[hlu fmevqbjh[hdh\hc \u[jhk aZ^gbc \k[hj ljZ\u \ ljZ\hk[hjgbd ba\beb mklZgh\blv aZ]emrdm ^eymklZgh\blv beb kgyglh\k[hjgbd b l ^

MklZgh\blv lj_[m_fmx \uklhlm

FHLHJGH? F:KEH

ВНИМАНИЕ!

=Zahghdhkbedb ihklZ\eyk aZ\h^Z [_a fZkeZ \ dZj^\b]Zl_ey l_j_^ aZimkdhjZ[hlm g_h[oh^bfh aZeblv g_h[ohdhebq kl\h qbklh]h fhlhjgh]h fZq_luj_olZdlguo ^\b]Zl_e_c

ВНИМАНИЕ!

DZ`^uc jZa i_j_^ aZimk^\b]Zl_ey g_h[oh^bfh ijh\ g_ jylv mjh\_gv fZkeZ \ dZjl_ijb g_h[oh^bfhklb ^heb\Zlv Fh fZkeh y\ey_lky \Z`guf nZdlhG_h[oh^bfh k\h_\j_f_ggh ijhba\h^af gm fZkeZ \ ^\b]Zl_e_

ВНИМАНИЕ!

G_evay ijbf_gylv fZkeh ^^\molZdlguo ^\b]Zl_e_c dhf_g^m_lky ijbf_gylv fZeh &+$03,21 6$(>himkdZ_lky fZkeZ ^jm]bo ijhba\h^bfZ\ZahglkI\mxs_]h dZl_]hjbb 6/ kl\mxs_]h \yadhklb ih deZkkbnbdZpbb $3,- b kh 6$(\ aZ\bkbfhklb hl l_fi_jZlmjhjm Zxs_]h \ha^moZ

ВНИМАНИЕ!

G_k\h_\j_f_ggZy aZf_gZ fZke_ hljZ[hlZ gZ fZke_ g_ khhl_lkl\mxs_c kj_^gZ ihklhyggh ihgb`_gghf mjh\g_ fZke_ jZ[hlZ gZ fZke_ g_ khhl\_lkl\mxs_f l_fi_jZlmj_ hdjm`Zxs_c kj_^gZ ijb_^_l d \uoh^m ba kljhy ^\b]Zl_ey_ b g_ [m^_l y\eylvky]ZjZglbcguf kemqZ_f

ВНИМАНИЕ!

Ijb aZimkd_ \ jZ[hlm gh\h]h mkljhckl\Z i_j\Zy aZf_gZ fZkeZ \ ^\b]Zl_e_ ihba\h^blky q_j_a qZkh\ jZ[hlu <lhjZy aZf_gZ fZkeZ q_j_a qZkh\ jZ[hlu mkljhckl\Z <k_ ihke_^mxsb_ aZf_gu fZkeZ \ ^\b]Zl_e_ ijhba\h^ylky q_j_a dZ`^u_ qZkh\ jZ[hlu mkljhckl\Z

A:IJ:<D: GH<H=H ><B=:L?EY F:KEHF

MklZgh\bl_]Zahghdhkbedm gZ jh\ghc]hjbahglZevghc ih_joghklb

Ih_jgbl_ djurdm smi -fZkehaZeb\ghc]hjeh\bgu ijhlb\ qZkh\hc klj_edb gZ]jZ^mkh\ kfhlj_lv k_jom b ba\e_dbl_ smi Jbk

AZe_cl_ g_h[oh^bfuc h[tzf fZ ijdhf_g^h\Zgghc dZl_]hjbb b klb khhl_lkl\mxs_c l_fi_jZl hdjm`Zxs_]h \ha^moZ fZk

hf^`^bl_ ijbf_jgh fbgmlm i g_]h kh\f_klbl_ \uklmiu gZ dj smj_ b iZau gZ fZkehaZeb\gl eh\bg_ b mklZgh\bl_ djurdm hl_jklb_]hjeh\bgu

:ddmjZlgh \ulZsbl_ smi b hkf l_ _]h Mjh_gv fZkeZ ^he`_g _lkl\h\Zlv _jog_c hlf_ld_ ©+ smi_ Jbk

1

2

Jbk DjurdZ smi fZkehaZeb\ghc]hjeh\bgu

DjurdZ smi =hjeh\bgZ fZkehaZeb\gZy

Jbk Ijh_jdZ mjh\gy fZkeZ

Ijb g_^hklZlhqghf mjh\g_ fZk dZjl_j_ g_h[oh^bfh ^heblv q fZkeh ^h _jog_c hlf_ldb ©+ smi_ Jbk G_ ^himkdZcl eb\Z beb ij_\ur_gby fZdkbfZe mjh\gy fZkeZ \ dZjl_j_ ^\b]Zl_

Kh\f_klbl_ \uklmiu gZ djurd_ b iZau gZ fZkehaZeb\ghc]hje mklZgh\bl_ djurdm smi \ hl_]hjeh\bgu b ih_jgbl_ ih qZk klj_ed_ kfhlj_lv k_jom - gZ ^mkh\ ^h mihjZ

I_j_^ aZimkdhf ^\b]Zl_ey g_h[o ijh_jblv mjh_gv fZkeZ \ dZjl_j

>ey wlh]h

MklZgh\bl_]Zahghdhkbedm gZ_jh\ghc]hjbahglZevghc ih_joghklb

Ih_jgbl_ djurdm smi -fZkehaZ eb\ghc]hjeh\bgu ijhlb\ qZkh\hc klj_edb gZ]jZ^mkh\ kfhlj_jv k_jom b ba\e_dbl_ smi Jbk

Ijhljbl_ smi gZkmoh kh\f_klhlj_\u klmiu gZ djurd_ smi_ b i-Zau gZ fZk ehaZeb\ghc]hjeh\bg_ b mklZgh\bl_ djurdm smi \ hl_jklb_]hjeh\bgu

:ddmjZlgh ba\e_dbl_ smi- b ^hkl_hlh l_ _]h Mjh_gv fZkeZ ^he`_gkhhl_lkl\h\Zlv _jog_c hlf_ld_ ©+ª gZ smi_ Jbk

Ijb g_^hklZlhqghf mjh\g_ fZkeZ \ dZjl_j_ g_h[oh^bfh ^heblv qbklh fZkeh ^h _jog_c hlf_ldb ©+ª gZ smi_ Jbk

Ihke_ hdhgqZl_evghc ijh_jdb mklZ gh\bl_ djurdm smi gZ f_klh

ВНИМАНИЕ!

Ihke_ aZijZ\db aZf_gu beb ijh_jdb mjh\gy fZkeZ \bam Zevguf hkfhljhf ijh_jycl_ hlkmlkl\b_ ijhl_q_d fZkeZ ba dZjl_ jZ Ijh_jycl_ gZ^_`ghklv mklZgh\bl_ djurdb smiZ fZkehaZeb\ghc ]hjeh\bgu i_j_^ dZ`^uf aZimkdhf ^\b]Zl_ey

ВНИМАНИЕ!

G_ ^himkdZcl_ ^he]h\j_f_g gh]h dhglZdlZ dh`b jmda[_k fZkehf <k_]^Z lsZl_evgh fhcl_ jmdb qbklhc \h^hc k fuehf OjZ gbl_ hljZ[hlZggh_ fZkeh \ ki_pbZev ghc _fdhklb AZij_sZ_lky \ueb\Zlv hljZ[hlZggh_ fZkeh gZ a_fex beb dZgZebaZpbx

IJH<?JD: <HA>MRGH=H NBEVLJ:

DZ`^uc jZa i_j_^ gZqZehf jZ[hlu q_h[oh^bfh ijh_jylv khklhygb_ \ha^mrgh]h nbevljZ b]hlh\ghklv _]h d jZ[hl

< khhl_lkl\bb k jZa^_ehf H;KEM@B<: GB? <HA>MRGH=H NBEVLJ: kgbfbl djurdm \ha^mrgh]h nbevljZ b ijh_jv

l_ qbklhlm b p_ehklghklv nbevl we_f_glh\ ?keb ihjhehgh\uc nb xsbc we_f_gl ihj\Zg ± _]h g_h[o aZf_gblv ?keb [mfZ`guc nbevljm we_f_gl ih\j_`^zg kfyl \ gzf bf_ hl_jklby j_abgh\h_ mieh-g_gb f_glZ ih\j_`^_gh b kbevgh aZ] [mfZ`guc nbevljmxsbc we_f_gl h[jZ\u lzfguc p_l k_juc b dhj gZ fZk bf_xlky fZkeygu_ iylgZ [gub nbevljmxsbc we_f_gl g_h[o aZf_gblv Ijb g_h[oh^bfhklb ijh ^hkl_hlh kem`b\Zgb_ \ha^mrgh]h n _khhl_lkl\bb k jZa^_ehf H;KE ©+ª gZ <HA>MRGH=H NBEVLJ:

ВНИМАНИЕ!

AZij_sZ_lky jZ[hlZ - ^\b]Zl_ey k]jyagufb beb i ^j_`^zggufb nbevljmxsbfb we_f_glZfb AZij_sZ_lky jZ[hlZ]Zl_ey [_a nbevljmxsbo we_f_g < ijhlb\ghf kemqZ_ ihiZ^Zgb_] iueb ijb_^_l d [ukljhfm ba-ghkm]Zl_ey <uoh^ ba kljhy ^\b]Zl_e wlbf ijbqbgZf g_ [m^_l y\eylvky]Zglbcguf kemqZ_f

I-HIEB<H

Bkihevamcl_ g_wlbebjh\Zgguc k hdlZgh\uf qbkehf Gbdh]^Z ihevamcl_ klZjuc beb aZ]jy-ag_g abg beb kf_kv fZkeZ b [_g-abgZ gmx kf_kv ^ey olZdlguo ^\b]Zl Ba[_k]Zcl_ ihiZ^Zgby]jyab beb lgheb\guc [Zd

ВНИМАНИЕ!

<uoh^ ba kljhy ^\b]Zl_ey beb \ijbqbg_ bkihevah\Zgby g q_kl_ggh]h beb klZjh]h ieb\Z Z lZd`_ lhieb\Z k g-_khh kl\mxsbf hdlZgh\uf qbkehf g_ [m y\eylvky]ZjZglbcguf kemqZ_f

ВНИМАНИЕ!

OjZgbl_ lhieb\h \ ki-pbZe gh ij_^gZagZq_gguo ^ey p_eb _fdhklyo AZij_sZ_l bkihevah\Zlv ^ey ojZg_gby dZg ba lbs_\h]h ieZklbdZ AZijZ\dZ

ieb\hf ijh\h^blky ijb aZ]emr_gbhf
^\b]Zl_e_ b \ f_klZo k ohj-hrbf ijh
_ljb\Zgb_f Ijb jZ[hl_ k lhieb\hf
aZij_sZ_lky dmjblv b ijbf_gylv hl
djuluc h]hgv G_ ^himkdZ_lky jZaeb\
lhieb\Z Ij_^hl\jZsZcl_ fgh]-hdjZl
guc beb ^he]h\j_f_gguc dhglZd dh b
k lhieb\hf Z lZd`_ \^uoZgb_ lhieb\
guo iZjh\

ВНИМАНИЕ!

G_ aZihegycl_ lhieb\guc [Zd
iheghklvx AZeb\Zcl_ [_gabg
\ lhieb\guc [Zd ^h mjh\gy
ijbf_jgh gZ ff gb`_ _jog_]h djZy
aZeb\ghc]hjeh\bgu qlh[u hklZ\blv
ijhkljZgkl\h ^ey l_ieh\h]h j-Zkrbj_
gby lhieb\Z

FZdkbfZevguc mjh_gv lhieb\Z ihdZaZg
gZ Jbk

Jbk FZdkbfZevguc mjh_gv lhieb\Z
\ lhieb\ghf [Zd_

>ey aZijZ\db lhieb\gh]h [ZdZ

Hqbklbl_ ih_joghklv lhieb\gh]h
[ZdZ hl aZ]jyag_gbc ijb g_h[ch^b
fhklb

Hldjmlbl_ djurdm lhieb\gh]h [ZdZ

AZe_cl_ [_gabg \ lhieb\guc [Zd ijb
ihfhsb ki_pbZevghc _fdhklb beb
\hjhgdb ^h mjh\gy ihdZaZggh]h gZ
Jbk

Ihke_ aZijZ\db lhieb\gh]h [ZdZ m[_
^bl_kv \ lhf qlh djurdZ lhieb\gh]h
[ZdZ gZ^_`gh aZdjulZ ^he`guf hl_
jZahf

>ckl\by ih ih^]hlh\d_]Zahghdh
jZ[hl_ \ jZaebqguo j_`bfZo ijb_
\ lZ[ebp_

A:MKD ><B=:L?EY

ВНИМАНИЕ!

l_j_^ dZ`^uf aZimkdhf ^\b
l_ey h[yaZl_evgh ijh_jy
l_ mjh_gv fZkeZ \ dZjl_j_
ijh_jvl_ mjh_gv fZkeZ \ dZ_
^\b]Zl_ey b gZebqb_ lhieb\Z
ieb\ghf [Zd_

>ey aZimkdZ ^\b]Zl_ey aZdjhc
^mrgmx aZkehgdm dZj[xjZlhjZ
wlh]h i_j__^bl_ juqZ]]ZaZ \ i
gb_ © ª \i_jz^ ^h mihjZ Jbk

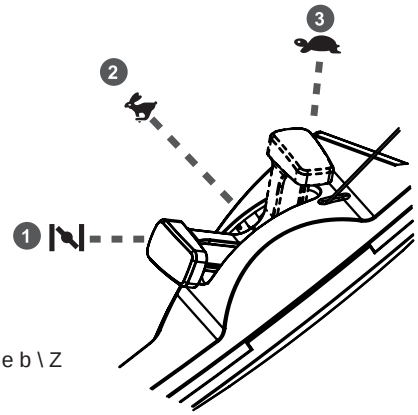

Jbk Iheh`_gby juqZ]Z]ZaZ
\b^ ke_\Z

<ha^mrgZy aZkehgdZ dZj[xjZlhjZ
juqZ] i_j__^zg \i_jz^ ^h mihjZ
Iheh`_gb_ fZdkbfZevguo h[hjhl
Iheh`_gb_ ohehkluo h[hjhlh\ ju
i_j__^zg gZaZ^ ^h mihjZ

<klZgvl_ ihaZ^b]Zahghdhkbed
jmdhc gZ`fbl_ gZ juqZ] hklZ
^\b]Zl_ey b m^_j`b\Zcl_ _]h Z
jmdhc \havfbl_ jmqdm klZjl_jZ
ijhf_jgbl_ dhe_gqZluc \Ze ^
l_ey jmqguf klZjl_jhf ^h l_o
ihdZ g_ ihqm\kl\m_l_ khijhlb\

L:;EBP: <u[hj j_`bfZ jZ[hlu

>ey k[hjZ ljZ\u- \hk[hjgbd ² ba\e_dbl_ aZ] ^ey fmevqbjh\Zg ² kgbfbl_ gZijZ-\ smx [hdh\h]h \u[² mklZgh\bl_ ljZ\h gbd	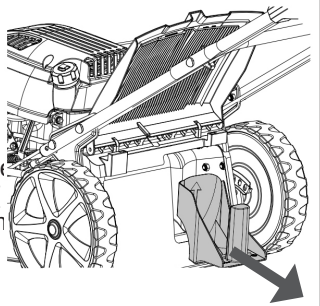	
>ey [hdh\h]h \u ljZ\u ² mklZgh\bl_ aZ] ^ey fmevqbjh\Zg ² mklZgh\bl_ gZijZ smx [hdh\h]h \u[	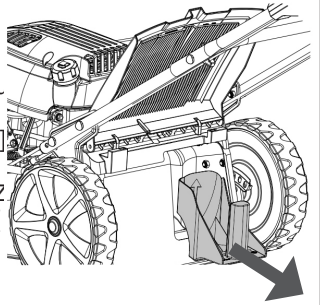	
>ey aZ^g_]h \u ljZ\u ² kgbfbl_ aZ]emrd fmevqbjh\Zgby ² kgbfbl_ gZijZ-\ smx [hdh\h]h \u[² mklZgh\bl_ mih-j g_c djurdb ^_db	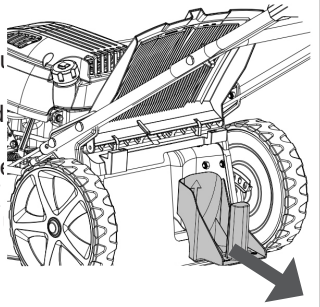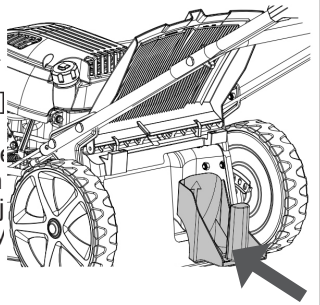	
>ey jZ[hlu \ j_ fmevqbjh\Zgby ² mklZgh\bl_ aZ] ^ey fmevqbjh\Zg ² kgbfbl_ gZijZ-\ sbc `zeh[[hdh \u[jhkZ b aZdj djurdm hl_jklby dh\h]h \u[jhkZ